MMRT

Bulletin SS09040 Issue/Rev. 0.2 (10/14)

Smith Meter® Totalizer / Rate Meter

The **MMRT** is a combination explosion-proof totalizer and rate meter. The unit has two eight-digit totalizers, one being an accumulated non-resettable totalizer and the other being an eight-digit resettable batch totalizer. The non-resettable totalizer can be toggled from the totalizer to the rate meter via a reed switch activated by a magnet located within the explosion-proof housing. The MMRT has a programmable scaler and decimal point which allows the displaying of totals and rate in any engineering terms.

Uses

The MMRT can be used with a variety of meters, including:

- **PRIME 4 meters**
- **PD meters with transmitters**
- **Turbine meters**
- **Mass meters**

Features

- **Eight-digit non-resettable totalizer**
- **Eight-digit resettable totalizer**
- **Flow rate indicator (on demand)**
- **Explosion-proof**
- **Programmable scaler and decimal point**
- **CE-compliant**

Typical Application

The MMRT has the ability to provide a local non-resettable totalizer, a resettable totalizer, and a flow rate indicator on a meter that provides an electronic output. The meters that provide a direct electronic output are the Smith Meter PRIME 4 meter, the mass meter, the turbine meter, and the multi-viscosity turbine meters. This unit can also be used with positive displacement meters that have a transmitter mounted on them.

Specifications

Accuracy: 100% when operated within specifications

Power

Internal Battery: 3V, Lithium
Life Expectancy: 3 years +

Inputs

Pulse Input

Type: Low speed (contact closures to DC common
Speed: 0 to 20 Hz
Minimum Low Time: 10 milliseconds
Minimum High Time: 40 milliseconds
Impedance: 101 K Ω

Voltage Thresholds:
Low 0 to 0.4 VDC
High 2.0 to 28 VDC
Maximum High 28 VDC

Type: High speed (requires a voltage source, i.e., current sourcing sensor or a current sinking sensor used with the provided pullup resistors)

Speed: 0 to 10 KHz

Minimum Low Time: 80 microseconds

Specifications (continued)

Minimum High Time: 20 microseconds
(times are with a 0 to 5.0 volt swing)
Input Impedance: 2K Ω above 5 VDC

Voltage Thresholds:
Low 0 to 1.2 VDC
High 2.0 to 28 VDC
Maximum high 28 VDC

Reset Input (Reset Batch Totalizer to Zero)

Minimum Low Time: 0.25 to 1.0 second (maintained)

Required pulse width varies with count speed, scale factor, and number of digits displayed

Voltage Thresholds:
Low 0 to 0.4 VDC
High 2.0 to 28 VDC

Program Enable Input

Connection must be made between terminals 1 and 5

LCD Display

Totalizers
Type: Up counters (lead-zero blanking)
Digits: 8
Scaler: 0.0001 to 100.0000
Decimal Point: 5 positions (programmable)

Rate Indicator
Type: 1/Tau
Digits: 4/5 (calculated, 5 displayed with a fixed 0)
Scaler: 0.001 to 9999
Decimal point: 5 positions (programmable)
Accuracy: ±0.02%

Backlight
10-30 VDC @ 30mA max. (derate operating temperature 1°C/volt above 17 VDC)
Reverse polarity protected

Environment

Ambient Operating Temperature
-20°C to 70°C (-4°F to 158°F)

Humidity
60% non-condensing

Enclosure
UL/CSA/FM/CENELEC
FM Standard 3615
CSA Standard C22.2 No. 30
UL Standard 1203
CENELEC Standard EN50014, EN50018
Class I, Division 1 and 2, Groups B, C and D
Class II, Division 1 and 2, Groups E, F, and G, EExd IIC, IP66
NEMA 4X

PA-11 Pulse Repeater

For turbine meter applications requiring a preamplifier, an optional PA-11 preamplifier can be fitted within the enclosure. Refer to Bulletin SS02019 for preamplifier specifications.

Battery Safety

The lithium battery that powers the device contains inflammable materials such as lithium organic solvent, and other chemical ingredients. Explosion or fire may result if the battery is not handled correctly. To avoid an accident, follow these guidelines:

- Do not open enclosure if the area is known to be hazardous
- Do not replace batteries in a hazardous area
- Do not stack or jumble up batteries
- Do not heat batteries above 95° C
- Do not disassemble batteries
- Do not recharge lithium batteries
- Do not apply pressure to, or deform, batteries
- Do not solder batteries
- Do not dispose of batteries in fire
- Insert battery with correct polarity.

Recommended Replacement Batteries
Panasonic P/N: CR 2/3A
Varta P/N: CR 2/3A
Fuji P/N: CR 2/3 8.L

Initial Start-Up
In a non-hazardous area, remove the protective battery insulating tab between the battery and clip to activate the display.

Wiring Diagrams		
Terminal	**Function**	**Operation**
1	Ground	
2	Input B Count input	Use with contact closure to ground up to 20Hz count speed
3	Input A Count input	Use with current sensing up to 10KHz count speed
4	Reset	Connect to ground to reset totalizer
5	Program enable	Connect to ground to enter program
6	Backlight common	
7	Backlight power	Connect to power to light display
8	Rate and Totalizer Toggle	Toggles between the Rate Meter and Totalizer

Modeling Code

MMRT – M

Basic Model Designation

MMRT

Mounting Option

Blank - Standalone
M - Turbine Meter Mounted w/PA-11 Preamp

Contact Closure Input

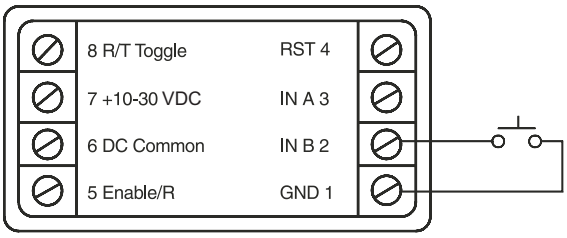

Solid State Count / Rate Input (Current Sourcing Sensor)

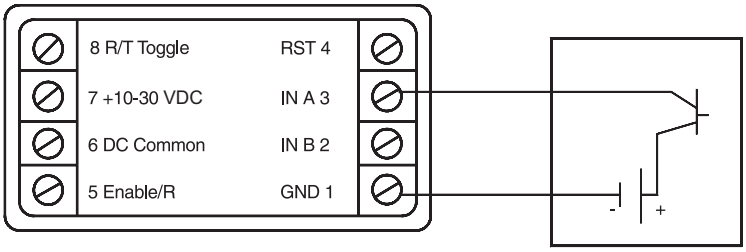

Solid State Count / Rate Input (Current Sinking Sensor)

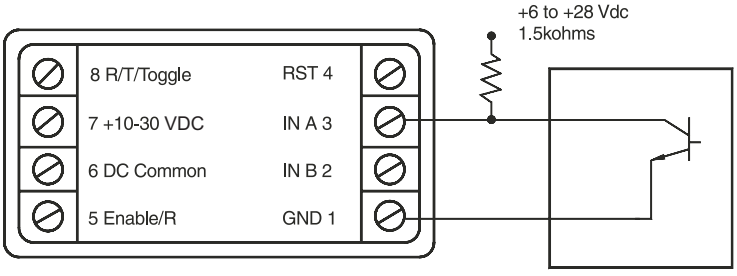

Solid State Count/Rate Input (Magnetic Pickup)

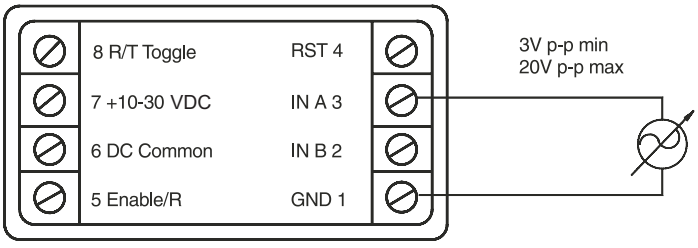

Backlight Wiring

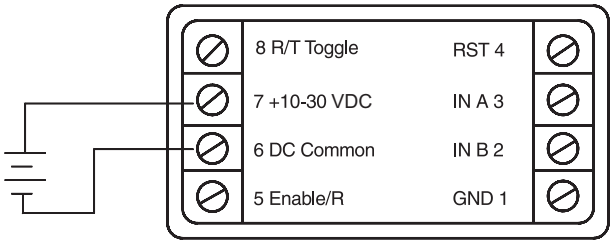

Program Mode Enable

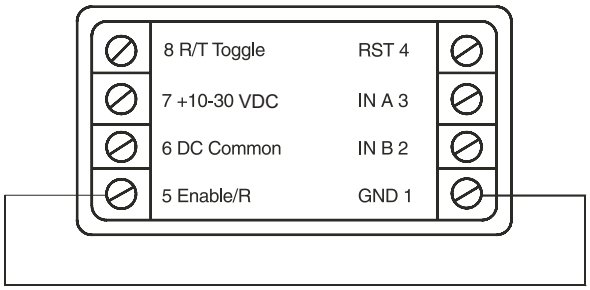

Remote Rate / Totalizer Toggle

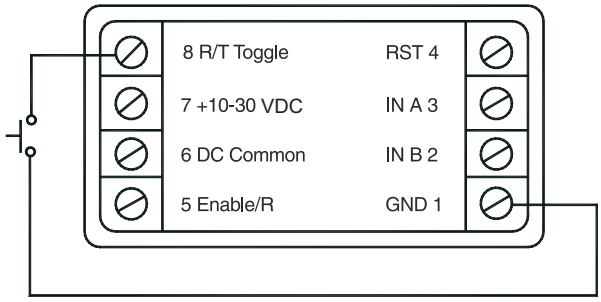

Remote Reset

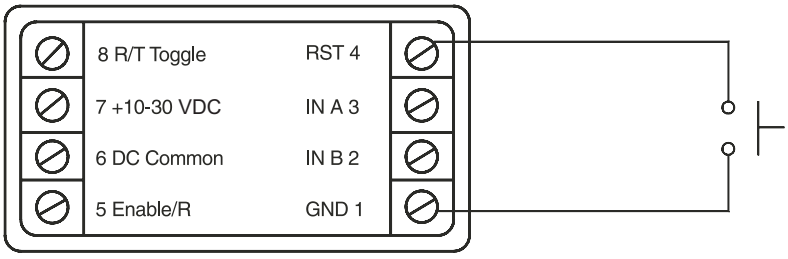

Smith Meter® Turbine Meter with PA-11 Preamp

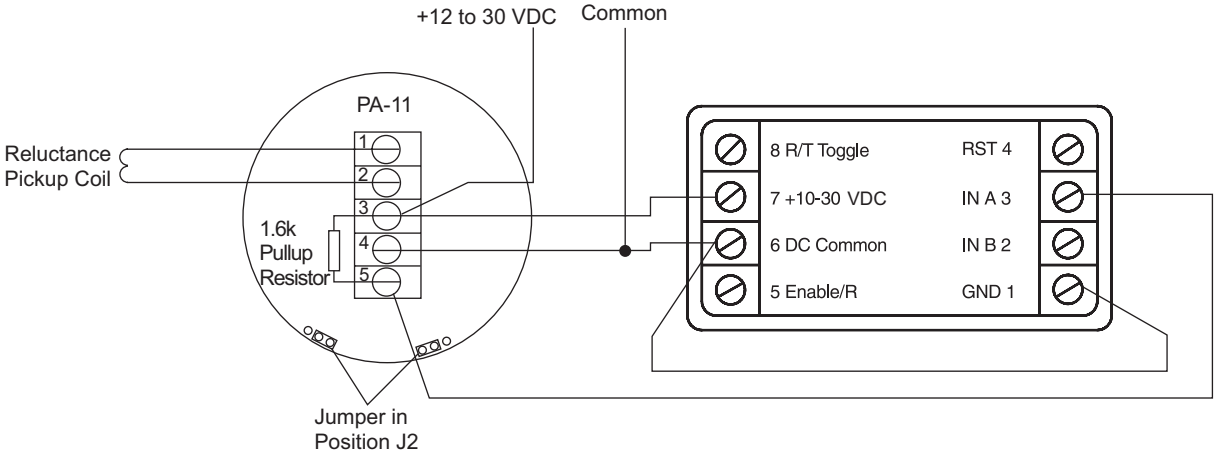

Dimensional Outline

Inches (mm)

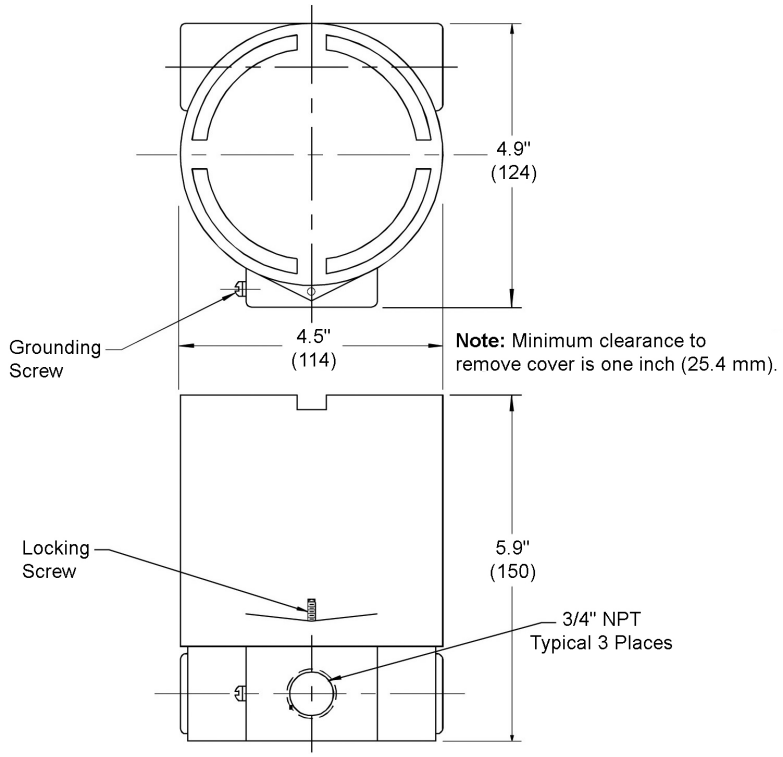

Note: 1. **Dimensions** – inches to the nearest tenth (millimetres to the nearest whole mm), each independently dimensioned from respective engineering drawings.

2. Hardware for Smith Meter Turbine Meter Mounting not shown.

Operation

Count Inputs

Separate contact and solid state count inputs are provided. The solid state input (terminal 3) requires a current-sourcing sensor and can count up to 10 kHz. Inputs into this terminal are counted on the positive-going edge.

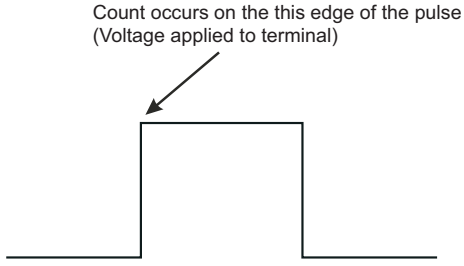

Terminal 3 is pulled down to common. When a sensor output supplies voltage to this terminal, one count is registered on the display. The sourcing signal must supply at least +2.0 VDC but no more than +28 VDC.

Note: When a sourcing signal is applied to terminal 3, a power assist feature of the Courier extends the life of the battery.

Terminal 2 is the low-speed, current sinking count input designed to be used with a contact closure to ground. It has a maximum count speed of 20 Hz. Inputs into this terminal are counted on the negative-going edge.

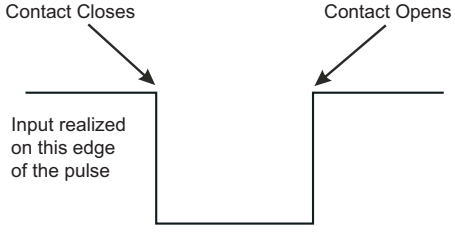

Terminal 2 is pulled up to +3VDC. When a contact closes, pulling the voltage down to .4VDC or less, one count is registered.

Run Mode

Count Inputs

Two screens are available on each of the totalizers.

Totalizer: This 8-digit screen shows the accumulated scaled count inputs. The totalizer has lead-zero blanking.

Rate Meter: This 4/5 digit screen shows current flow rate.

The totalizer mounted on the top of the unit has been wired as a non-resettable totalizer providing accumulative totals. The bottom totalizer has been wired to two magnetic switches that can be activated with the magnet that is supplied with the unit. The magnetic switch mounted center left when activated will switch the bottom totalizer between the batch totals and the flow rate. There is also a magnetic switch mounted center right which is used to reset the totals on the bottom totalizer.

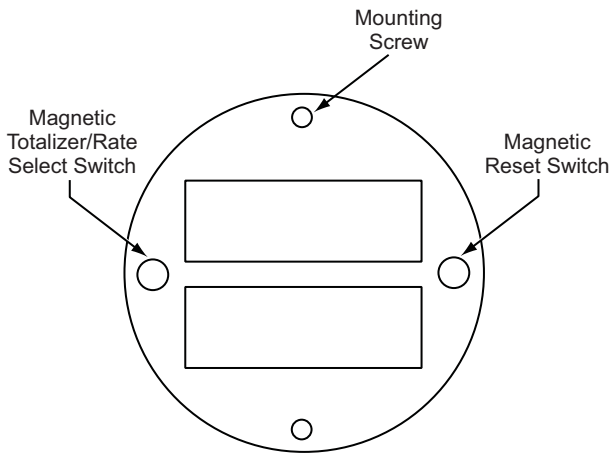

Activate the respective magnetic switch by holding the supplied chain magnet above the switch on the outside of the enclosure.

Display Orientation

Display orientation can be rotated in 90 degree increments by removing the two mounting screws and 1/4" hex standoffs and repositioning in the optional tapped holes in the base of the housing.

Front Panel Keys

The front panel keys are accessible when the cover is off the unit. These keys are typically used for setup.

Press the T/R ◀ key on the front panel to toggle between the totalizer and rate meter screens when the cover is removed from the unit.

Press the RST ▲ key to reset the totalizer display to zero. This button has no effect on the rate meter screen.

The front panel reset key provides an edge-sensitive (momentary) reset.

Note: The T/R ◀ key may be disabled. See Program Mode, below.

Magnetic Switches

After the unit has been set up for operation, the magnetic switches mounted on the left center and right center of the unit provide the same functions as the T/R ◀ key and the RST ▲ key.

Left Magnetic Switch: Activate to toggle between the totalizer and rate meter screens on the bottom totalizer.

Right Magnetic Switch: Activate to reset the bottom totalizer screen to zero.

Program Mode

To enter the program mode, a connection must be made between terminals 1 and 5 on the back of the totalizers.

Screens

There are six program mode screens on each of the totalizers.

Press and hold the T/R ◀ key while repeatedly pressing the RST ▲ key to advance to successive screens.

Programming Screens

Screen	Function
1	Count Scale Factor
2	Totalizer Decimal Factor
3	Rate Scale Factor
4	Rate Meter Decimal Point
5	Rate x1/x10
6	Reset Key Enable/Disable

Count Scaler

Calculating the Count Scale Factor

The count scale factor is used to convert the incoming count pulses to the desired unit of measure to be displayed (feet, gallons, etc.) or to correct for a known amount of error (wheel wear, viscosity, etc.). This scaler has six digits available with a fixed decimal point.

Count Scaler Range: 0.0001 to 99.9999

Count Scaler (CS) Formula:

$$CS = \frac{DPF}{PPI}$$

where:

DPF is the decimal point factor corresponding to the desired decimal point location.

DISPLAY	DPF	DISPLAY	DPF
XXXXXX =	1	XXX.XXX =	1,000
XXXXX.X =	10	XX.XXXX =	10,000
XXXX.XX =	100		

PPI is the number of pulses per item from the sensor (times 2 if doubled count mode).

Example 1: A transmitter produces 50 pulses per gallon of product. Calculate the count scaler required to indicate number of gallons per product (XXXXXX).

$$CS = \frac{1}{50} = 0.02000$$

Example 2: A turbine meter preamp produces 15.8 pulses per liter. Calculate the count scaler required to indicate the number of liters of product that has passed through the meter (XXXX.XX).

$$CS = \frac{100}{15.8} = 6.3291$$

(Select the XXXX.XX position on the totalizer decimal point menu.)

Programming Count Scale Factor

The first screen in the program mode is used to enter the count scale factor.

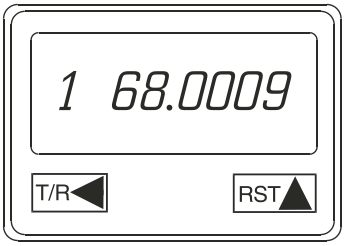

The far right digit will be flashing. Press the RST▲ key until reaching the desired digit value.

Note: Pressing and holding the RST▲ key will cause the numbers to autoscroll.

Next press the T/R◀ key to move the flashing digit one place to the left. Change this digit to the desired value with the RST▲ key.

Repeat this process until all digits are set correctly.

(Setting the count scale factor to 0.00000 will allow scaling by 100.)

Programming Totalizer Decimal Point

The second screen is used to enter the decimal point display on the totalizer screen. Press and hold the key T/R◀ and then press the RST▲ key to move from screen one to screen two.

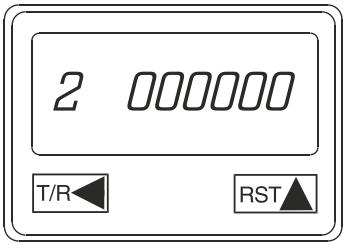

Press the RST▲ key to move the decimal point to the desired position.

Rate Scaler

Calculating the Rate Scale Factor

This 1/Tau rate meter calculates rate by measuring the time interval between input pulses, converting to a frequency (F = 1/Tau), and multiplying the product by the rate scaler. The rate scaler is user-programmed to convert the count input frequency into the desired rate units for display (gallons/minute, gallons/hour, liters/minute, cubic meters/hour, etc.).

Rate Scaler Range: 0.001 to 9999

Rate Scaler (RS) formula:

$$RS = \frac{Sec \times DPF}{PPI \times 10} \quad \text{for R x 10}$$

where:

SEC is the number of seconds in the rate time unit (items/second = 1, items/minute = 60, items/hour = 3600, etc.).

DPF is the decimal point factor corresponding to the desired decimal point location on the run mode screen:

Display	DPF
XXXX	1
XXX.X	10
XX.XX	100
X.XXX	1000

PPI is the number of pulses per item from the sensor.

Example 1: A transmitter produces 50 pulses per gallon of product. Display rate in whole gallons per minute (XXXX).

$$RS = \frac{60 \times 1}{50} = 1.200$$

Example 2: A flow sensor produces 15,800 pulses per cubic meter. Display flow rate in tenths of liters per hour.

$$RS = \frac{3600 \times 10}{15{,}800} = 2.278$$

Programming Rate Scale Factor

The third program mode screen allows you to enter the rate scale factor.

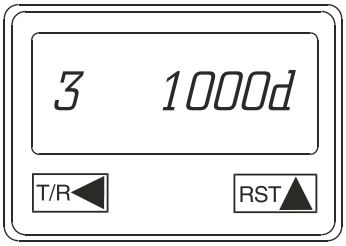

The lower case "d" appears on the right of the display when it is time to enter the decimal point position for the rate scaler.

Note: This decimal point is used for the rate scaler only and will not appear on the rate meter screen.

Press the RST▲ key to change the first digit to the correct value. Press the T/R◀ key to select the next digit to be changed. Repeat this process until all the digits are correct. When the "d" appears, press the RST▲ key until the decimal point is in the desired location.

Ratemeter Decimal Point

The fourth program mode screen is used to enter the decimal point position for the rate meter run-mode display.

The display will show the screen number (4) and four zeros.

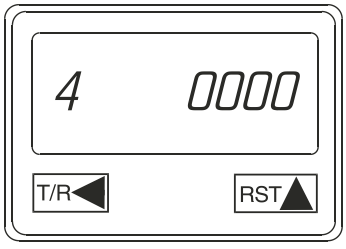

Press the RST▲ key until the decimal point is in the correct position.

Rate x1 or X10

The fifth screen is used to select the rate display multiplier of one or ten. Selecting rate x10 will add a zero to the far right of the display. This zero will not change value and does not affect the decimal point position.

The display will show the screen number (5) and a 1 at the right.

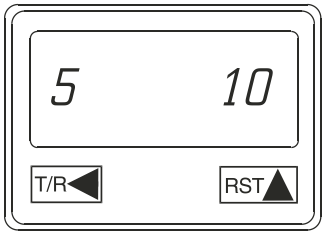

Press the RST▲ key to select 1 or 10.

Front Reset Key Enable/Disable

The last screen in the program mode is used to determine whether the front panel reset key will function. The screen will show a number 6 on the left and an R on the right.

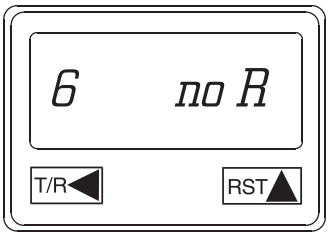

Press the RST▲ key to choose the option you want.

Note: The reset terminal on the rear panel is still active when the front reset button is disabled.

To exit the program mode, break the connection between terminals 1 and 5.

USA Operation
1602 Wagner Avenue
Erie, Pennsylvania 16510 USA
P:+1 814.898.5000

TechnipFMC
13460 Lockwood Road
Building S01
Houston, Texas 77044 USA
P:+1 281.591.4000

Germany Operation
Smith Meter GmbH
Regentstrasse 1
25474 Ellerbek, Germany
P:+49 4101.304.0

TechnipFMC.com

 SS09040 Issue/Rev. 0.2 (10/14)